TECHNICAL DATA SHEET
48" x 42"
(1219.20mm x 1066.80 mm)
INCA Engineered Molded Wood™ Pallet

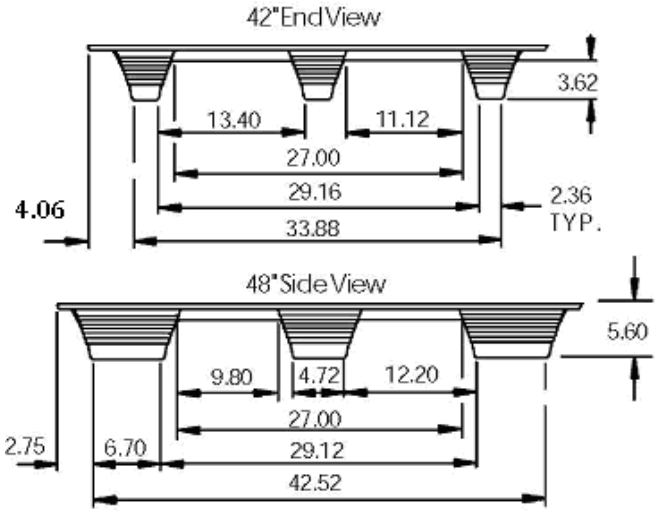

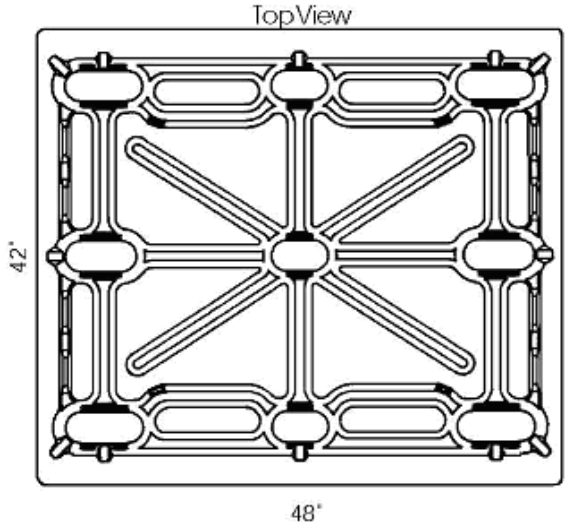

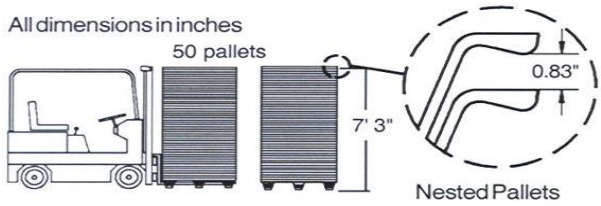

To see our pallet in action, click here https://www.litco.com/pallet-handling/.

4/05/2022

Manufacturing & Composition
Engineered molded wood pallets are made in one solid piece from dried wood fibers and environmentally safe synthetic resin in a compression mold under high pressure and temperature.

Design for Safety
Because our pallets weigh up to 50% less than conventional, solid hardwood pallets, they are safer and easier to handle. And, there are no nails or splinters to damage product or injure personnel.

Low Moisture Content
Only 6 - 8% moisture content, high resistance to mold and no moisture transmission to product or packaging load on the pallet.

Approximate Surface Area
Top Deck: 1096 sq. inches
Footprint: 103 sq. inches

Approximate Dynamic Load Capacity*

DUTY	CAPACITY	COLOR CODE PAINTED STRIPE
Medium	1500 lbs.	Green
Heavy	2000 lbs.	Red
Extra Heavy	2500 lbs.	White

*Not intended for use in open beam rack storage. Load uniformly distributed on pallet deck. Actual load capacity is application specific & dependent upon the product, packaging, load containment & handling environment. The testing of our pallets with the intended application is strongly recommended.

Full 4 Way Entry
4-way entry with fork truck 4-way entry with pallet jack

De-Nest With a Lift Truck
A stack of 50 pallets nest approximately 7' high. For each additional pallet, add 2" to height of stack. They can easily be de-nested with a lift truck.

Quantity per 53" Shipping Van
Quantities vary with pallet size and pallet capacity.

DUTY	TRUCKLOAD/QTY	LBS./PALLET
Medium	1200	35.0 (+/- 1.5)
Heavy	1050	39.0 (+/- 1.5)
Extra Heavy	1000	41.0 (+/- 1.5)

IPPC-ISPM15 Export Compliant!
Engineered molded wood pallets are welcome worldwide. They are considered "processed wood" per ISPM 15 export wooden packaging regulations. No extra or costly treatment against infestation is required.

LITCO Carry on.

LITCO INTERNATIONAL INC.

Phone 330-539-5433 / 800-236-1903

www.litco.com EWPG@litco.com

ISPM 15 EXPORT COMPLIANT

USDA CERTIFIED BIOBASED PRODUCT

cradle to cradle